FT- 4000

Programmable Flushing Station
Site Installation Instructions and Guidelines

Overview:

Installing the FT-4000 is a relatively straight forward process. Most installations are located at pre-existing locations and these instructions will be assuming this. Each location will have it's own challenges and differences that you will have to overcome but these guidelines will help you to recognize potential issues.

Installation

1.Location: One key concern you should look for first is the distance between the gate (shut off) valve and the discharge pipe. There needs to be at least 20” of distance between the two. If the separation is less, you need to extend the pipe. Use this opportunity to reroute your discharge pipe to a more suitable location if you wish. Once the discharge pipe is determined to be at a suitable distance from the gate valve its time to prep the discharge pipe.

2.Discharge pipe prep: Most discharge pipes are galvanized steel pipe. You need to change the type of pipe to schedule 40 PVC. Because the valve is mounted in the FT-4000 at a predetermine height, using PVC is the easiest to work with. To couple the existing metal pipe to PVC we suggest using a Harco knuckle restraint and the appropriate 2” threaded adapter. The adapter should be below grade to allow room to couple your stub up to the FT-4000. Make sure the pipe in plum. The pipe must come out of the ground as plum as possible. When finished, there should only be a 2’ or so pipe stub sticking out of the ground.

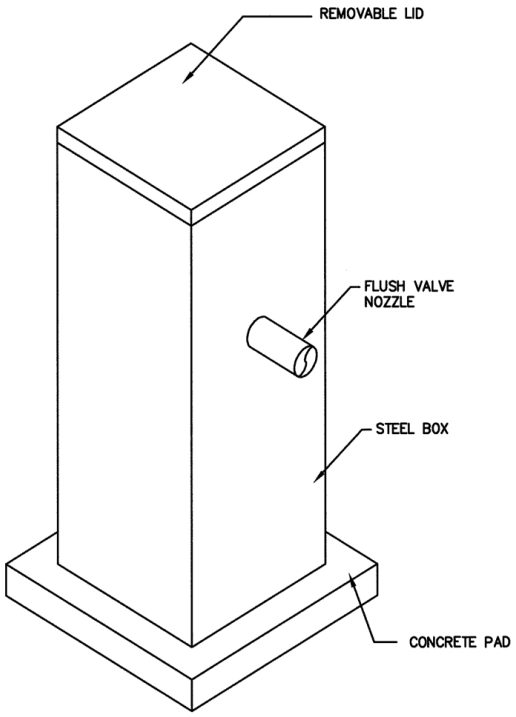

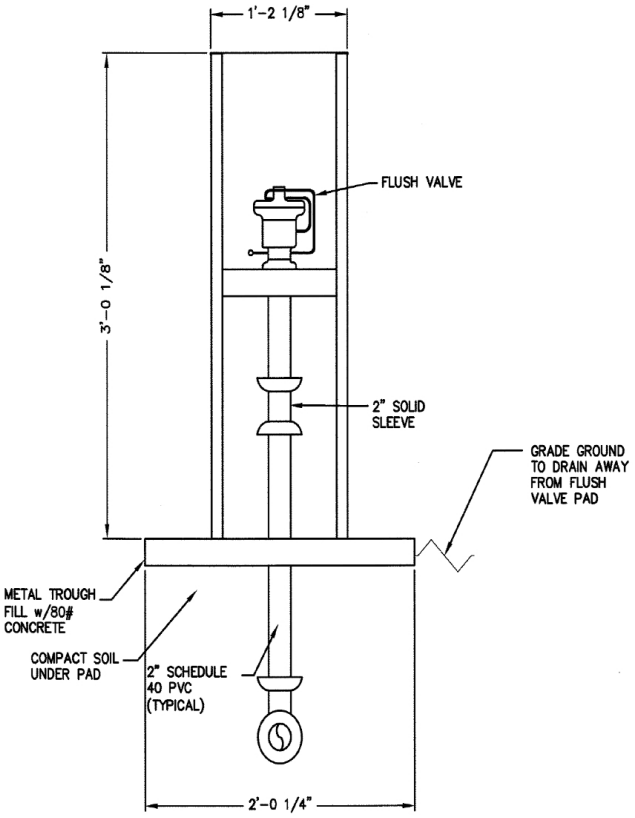

PO Box 1738, Mt. Pleasant, TX 75456 ● (800) 283-9432 ● ryan@prestigewwt.com ● www.prestigewwt.com

3.Foundation: Grade and compact the soil around the pipe stub to create a level and firm foundation for the enclosure to rest on. Place the enclosure over the pipe stub and check for level.

4.Connecting to the FT-4000: With the enclosure over the pipe stub, mark the pipe stub so that when cut there is 3/8" to ¼" gap between the pipe stub and the schedule 80 PVC on the inlet of the valve. Cut the pipe stub level. Using a 2" PVC slip coupler, cement everything together. Please use the extra long style coupler. **Do not remove the valve from the enclosure!** You will have to lift the enclosure up and onto the stub up to cement. Wait for the cement to set and cure before charging the pipe with water.

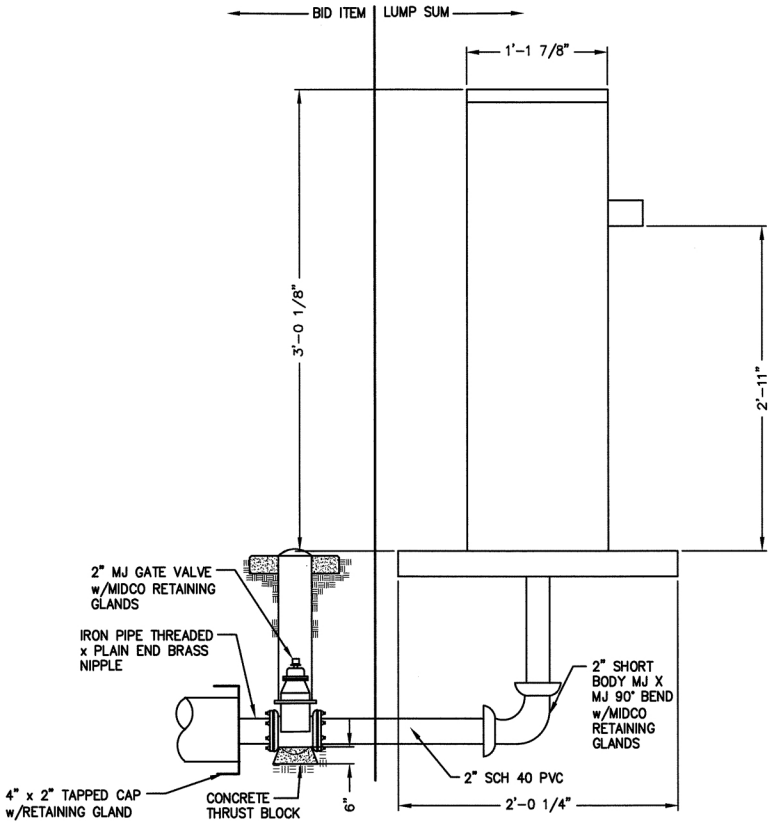

5.Turning on the Water: Once the PVC coupler has set and cured, it's time to turn on the water. The first thing you want to do, is to loosen the stem limiter to allow air to bleed out of the cover. Make sure the closing speed control is open (about 2 turns). Open the gate valve slowly. The valve will flow water at first, so do not open the gate valve fully. Stop opening the gate valve when your flowing about 3-5 gallons per minute. When the pilot system is filled with water, the valve will go closed. Tighten the stem limiter when all air is bled from the cover.

6. Securing the FT-1000: The base of the FT-4000 is designed to accommodate a 80# sack of concrete. (You do not need to premix the concrete; simply pour the dry cement into the base of the enclosure). **Do not get concrete into the door guides.** Taper the concrete so that the water will run away from the enclosure.

To set the FT-4000 for operation, follow the instructions in the User Manual.

PO Box 1738, Mt. Pleasant, TX 75456 ● (800) 283-9432 ● ryan@prestigewwt.com ● www.prestigewwt.com

PRESTIGE
Worldwide Technologies, LLC.

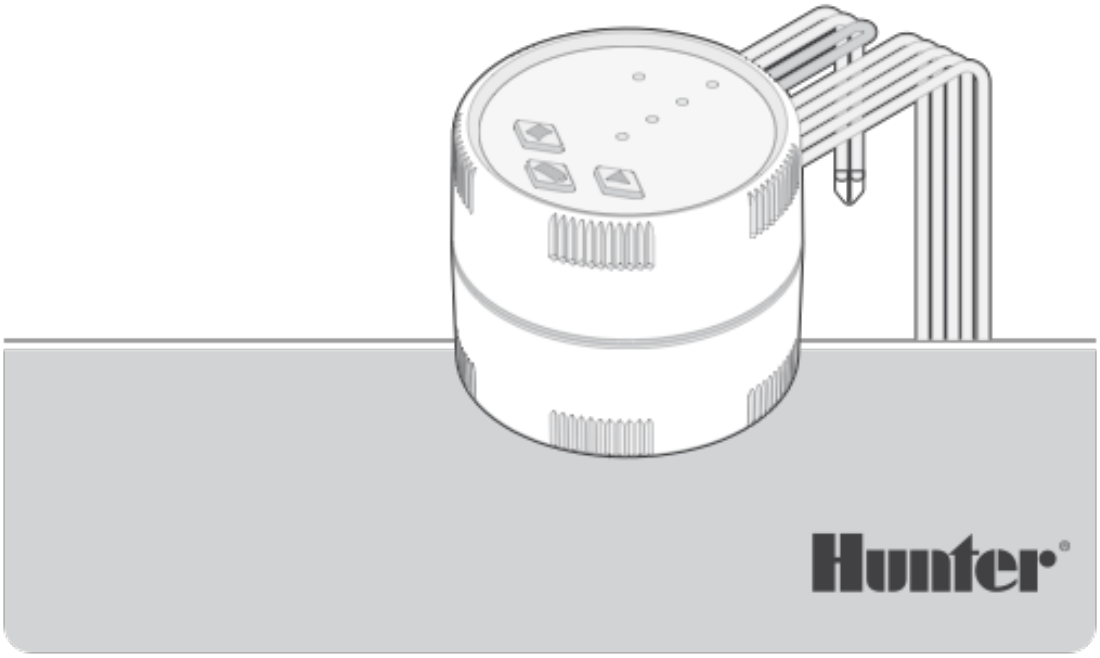

NODE-BT

QUICK START GUIDE

Navigating the Controller

1. Battery check LED
2. - 5. Active station indicator LEDs

6. Manual station stop: Hold button to stop active station.
7. Manual station start: Hold button to select station indicated by the station LED. Release button to activate.
8. Battery check button

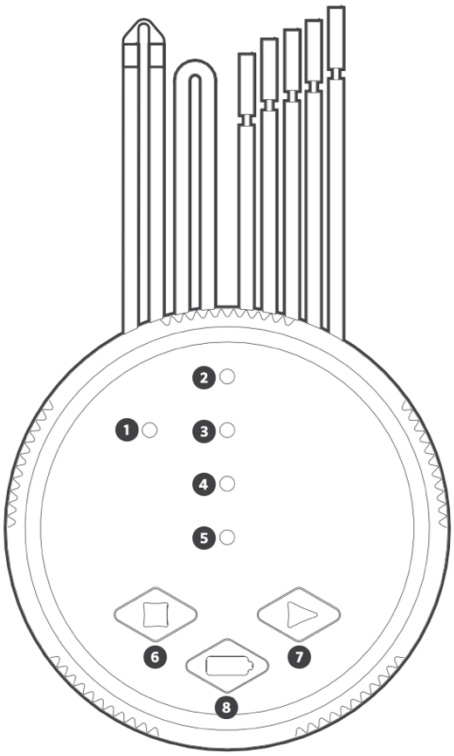

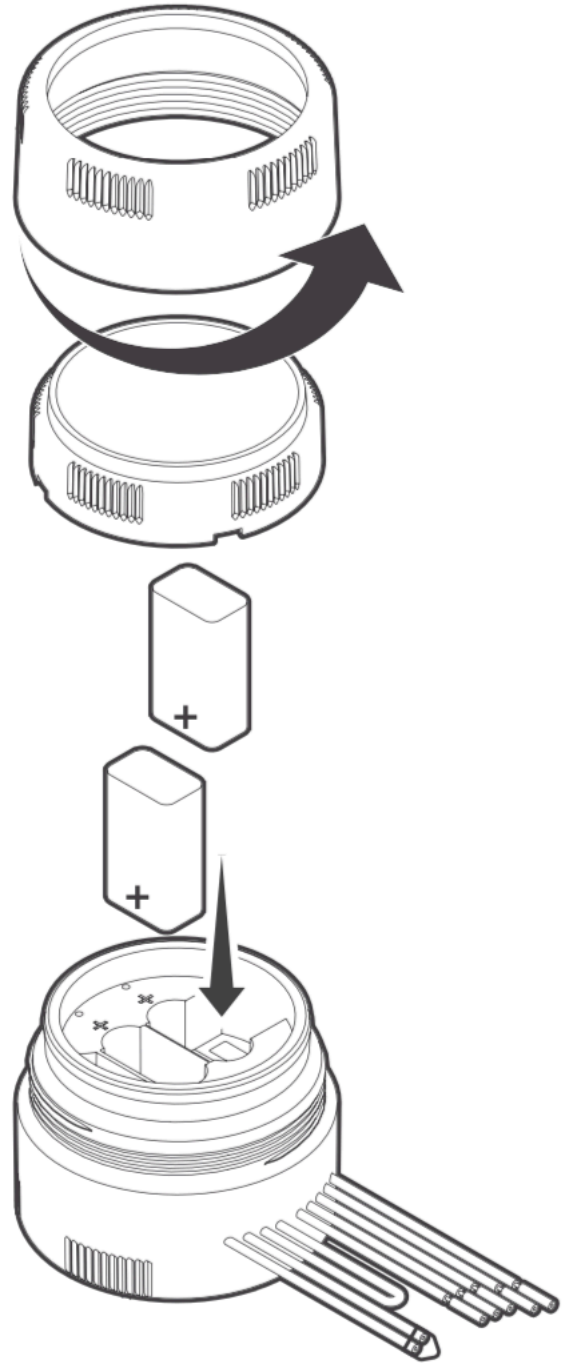

1. Unlock the battery compartment by rotating the cap counter- clockwise until collar and cap are removed.
2. Insert one or two 9-volt alkaline batteries into the battery terminals. Observe and match the + position.
3. Secure the battery compartment by rotating clockwise until tightened.
4. Test power to the NODE-BT by pressing the battery check button on the front of the controller. Observe and check for the illuminated green LED. If the LED is red, the battery needs a replacement.

Solenoid operation:

Use only DC-latching solenoids (P/N 458200) operating between 9-11 volts. 24-volt AC solenoids will not operate with NODE-BT.

Wiring distance:

The maximum wire distance between the solenoid and the NODE-BT is 100' (30 m) using 18 AWG (1 mm^2) minimum wire gauge.

App Programming

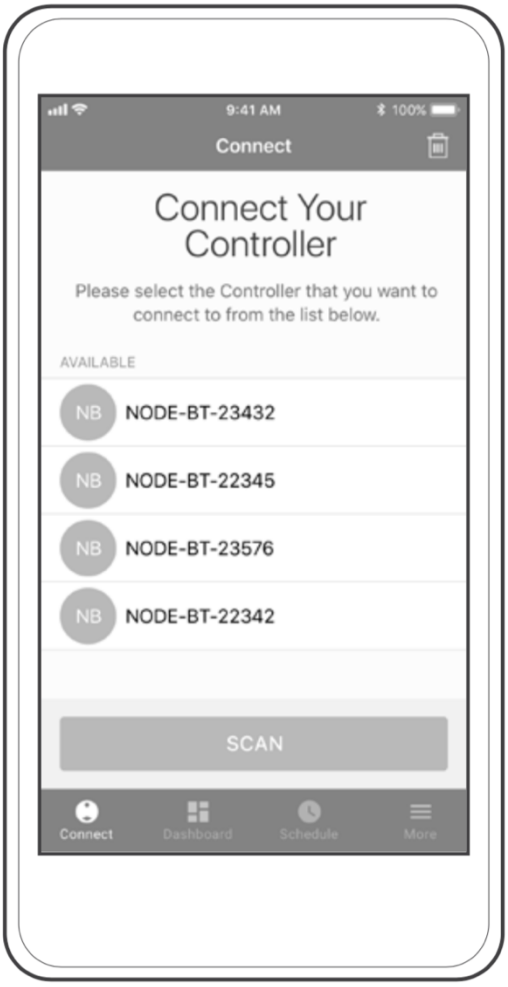

Download the free Hunter NODE-BT app to a smartphone device from the iTunes® Store for iOS® devices, or the Google PlayTM store for AndroidTM devices.

Requires iOS 9.0 or later. Compatible with iPhone®, iPad®, and iPod touch® devices. Requires Android 5.0 or above.

Be in range of the controller.
Turn on Bluetooth on the smartphone device.
Press the SCAN button and connect to a NODE-BT controller.

Available on the iPhone App Store

Visit hunter.direct/nodebtios

ANDROID APP ON Google play

Visit hunter.direct/nodebtandroid

Schedules

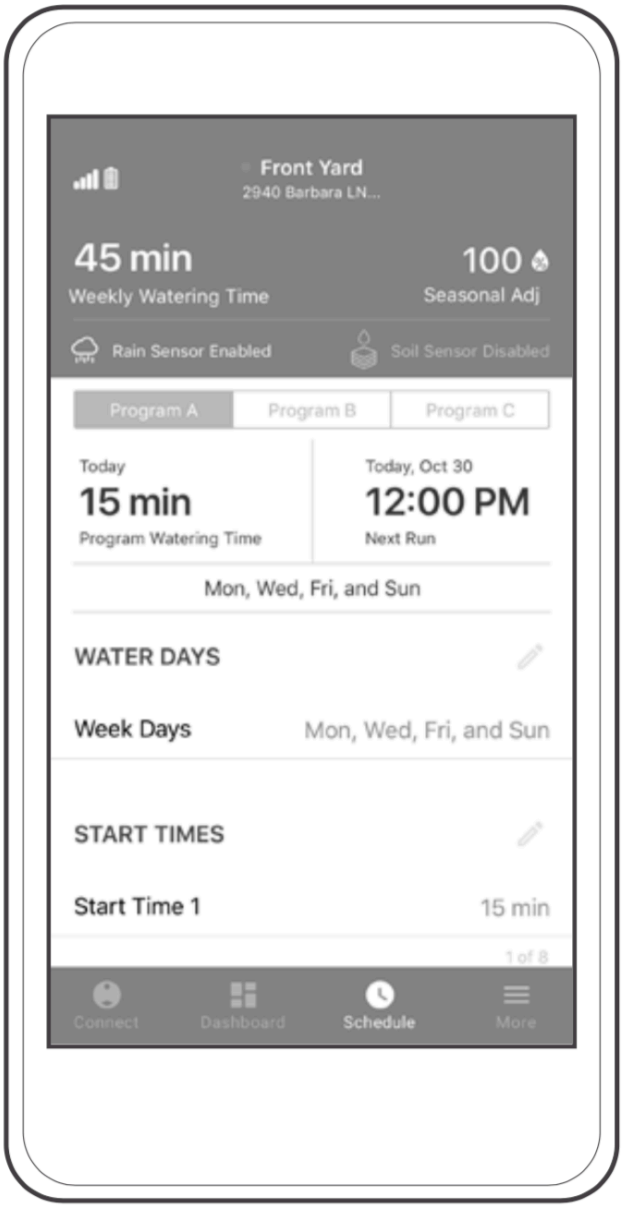

Send full irrigation schedules to the controller by pressing the Schedule icon on the bottom tray and clicking the pencil icon to edit the program.

1. Programs: Use up to three programs (A, B, or C) for irrigation.
2. Water Days: Select the desired water days or interval days from 1 to 31 with days remaining or odd/even days. Confirm and Save.
3. Start Times: Set START TIME 1 and optional START TIME 2 through 8. Confirm and Save.
4. Run Times: Set the desired RUN TIME from 1 second to 12 hours.

Confirm and Save.

Controller Settings

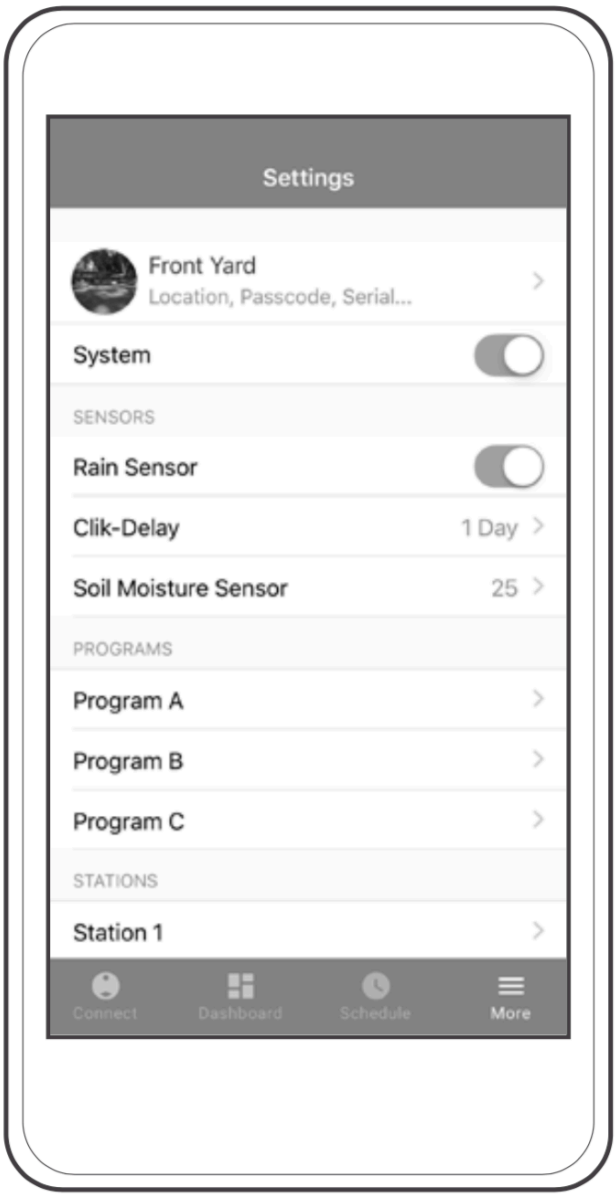

1. Rain Sensor: Turn On to suspend automatic irrigation. Rain or Clik sensor required.
2. Clik-Delay: Suspends irrigation after a rain event up to 7 days.
3. Cycle & Soak: Turn on in the Station settings. Input the amount of time the station shall run and pause. Confirm and Save.
4. Programmable Days Off: Set from 1-99 days. Confirm and Save.
5. Seasonal Adjustment: Quickly adjusts run times from 0% to 300% global or by month. Confirm and Save.
6. Delay Between Stations: Set all station delays between 10 seconds and 4 hours. Confirm and Save.
7. Pump/Master Valve: Turn On to assign Station 1 to use as a pump or master valve for all programs. Station 1 will no longer be used for irrigation. Requires multi-station NODE-BT and normally closed master valve.
8. Set Manual Controller Run Time: Set a custom run time from 1 minute to 12 hours. Save and Confirm.

10. Factory Reset: Restores controller back to factory defaults. Enter passcode if set. Confirm.

11. Controller Off Mode: Select the System toggle to shut down controller.

Additional Settings

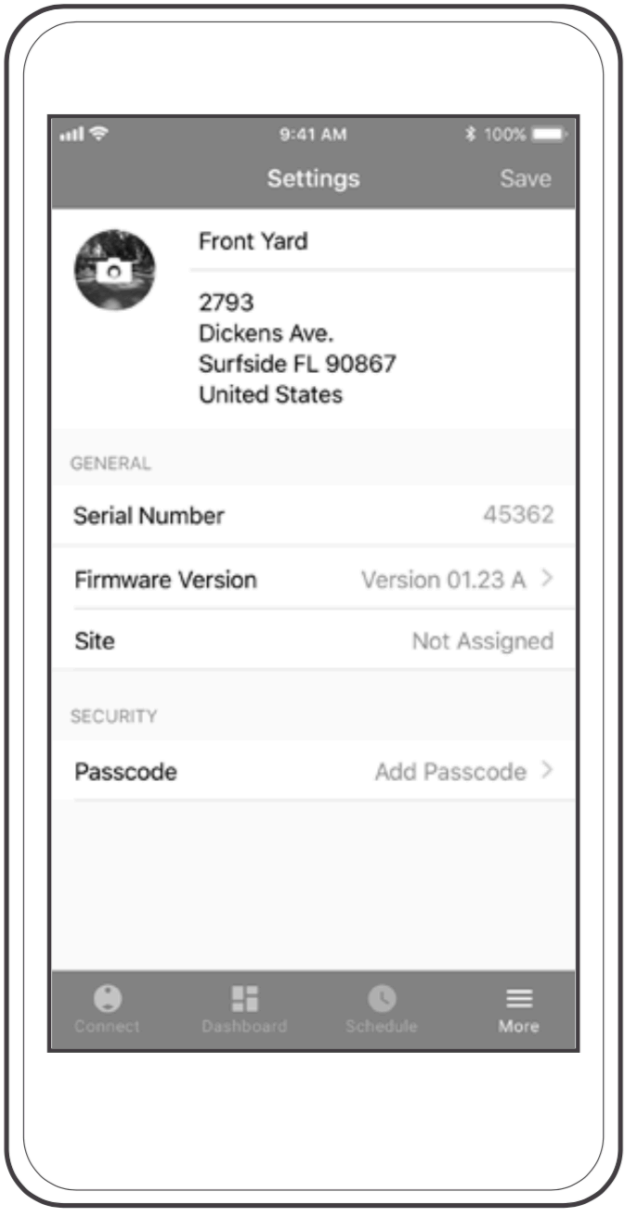

Select the More icon and click the first row with the default controller name to reveal the serial number, firmware version, site, and passcode.

1. Customize your NODE-BT: Enter the nickname, location, and add an image. Confirm and Save.
2. Create a Passcode: Select Turn On Passcode to protect your device. Confirm and Save.
3. Language Preferences: The app will automatically recognize your smartphone's language preferences and if available, the app will translate.

To restore controller to the factory defaults:

1. Remove controller batteries.
2. Wait one minute.
3. Press and Hold Battery Check Button

Restoring factory defaults will permanently erase schedule and settings.